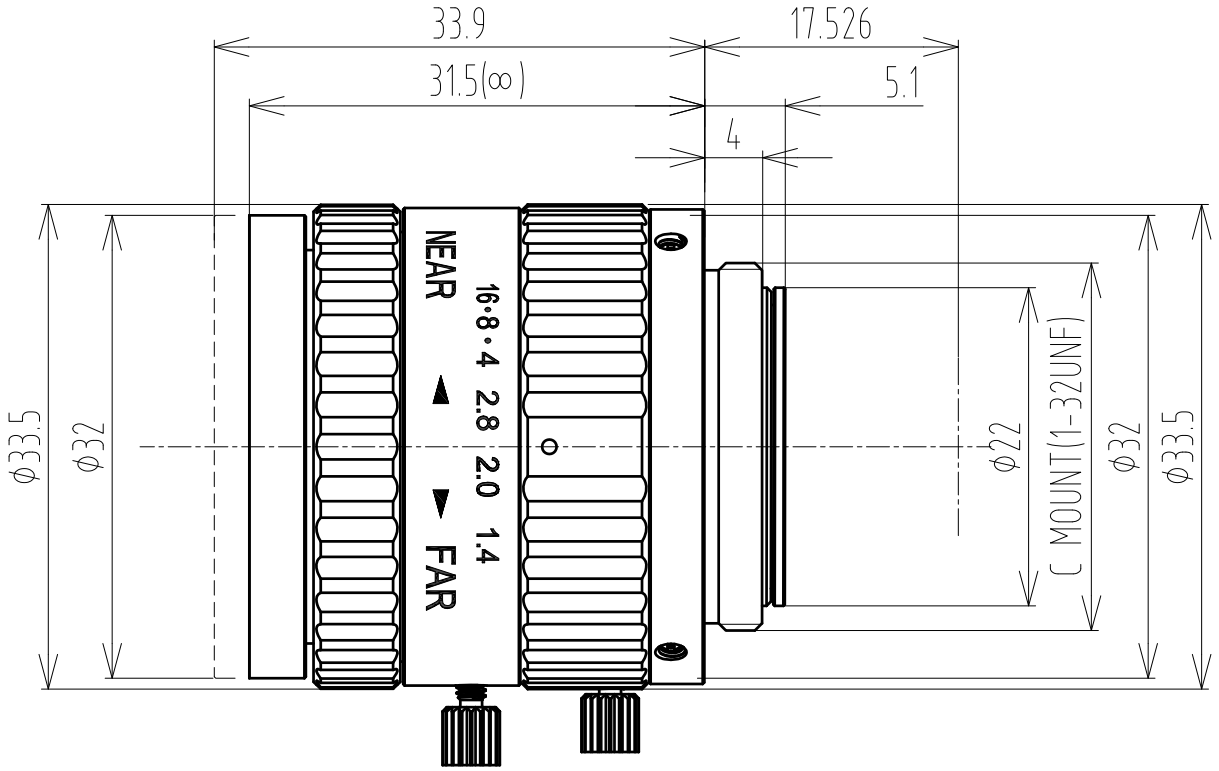

2/3" F1.4/16 C Mount					Working distance	Optical Magnification	2/3" Field of View(mm)	
Focal Length		f=16mm			mm		H	V
Max Diameter (Ratio)		F=1:1.4~16			900	0.018X	503.2	376.8
Picture Size		2/3"(8.8×6.6mm)	1/2"(6.4×4.8mm)	1/3"(4.8×3.6mm)	850	0.019X	475.6	356.2
Angle	H	30.3°	22.3°	16.8°	800	0.020X	448.0	335.5
	V	23°	16.8°	12.6°	750	0.021X	420.4	314.8
	D	37.3°	27.8°	20.9°	700	0.023X	392.8	294.1
Object Dimension at M.O.D	H	170.4mm	123.7mm	116mm	650	0.024X	365.2	273.4
	V	127.6mm	92.7mm	69.4mm	600	0.026X	337.6	252.8
	D	212.8mm	154.9mm	123.7mm	550	0.029X	310.0	232.1
Distortion (TV)		<0.1%	<0.3%	<0.1%	500	0.031X	282.5	211.4
Focus distance(min)		0.3m			450	0.035X	254.9	190.7
Flange back		17.526mm in air			400	0.039X	227.3	170.0
Back focus		12.7mm in air			350	0.044X	199.7	149.4
Filter screw size		M30.5×0.5			300	0.052X	170.4	127.6
Front/Rear Effective Dia		Front ϕ19mm Rear ϕ14.2mm			250	0.061X	144.5	108.0
Mount		C-Mount			200	0.076X	116.9	87.3
Temperature Range		-10~+50°C			150	0.100X	89.3	66.6
Storage Temperature Range		-20~+60°C			100	0.145X	61.7	45.9

					TOLERANCE: . LINEARITY TOLERANCES ±0.05 . ANGULAR TOLERANCES ARE±30' . DRAFT ANGLES AREA±0.5°/SIDE	三角法		材 料(环 保)	单 位	比 例
								---	mm	2:1
					设 计			名 称	FA1602A 镜头	页 码
					校 对					1/1
					审 核			代 号	FA1602A	版 本
标记	处数	更改文件号	担当	变更日期	批 准					V0

CHIOPT